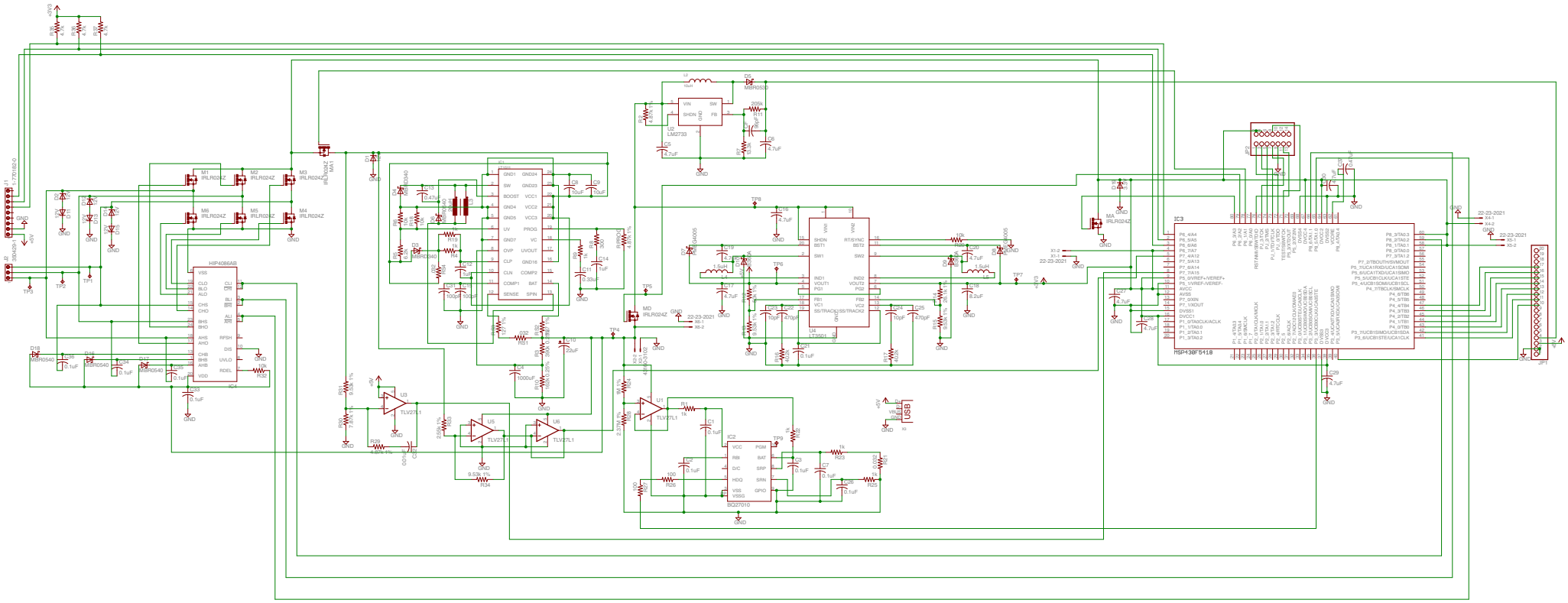

1/30/09 9:55 AM f=0.37 /Applications/EAGLE/Senior Design/Rev_1/Controlled_Rectifier.sch (Sheet: 1/1)