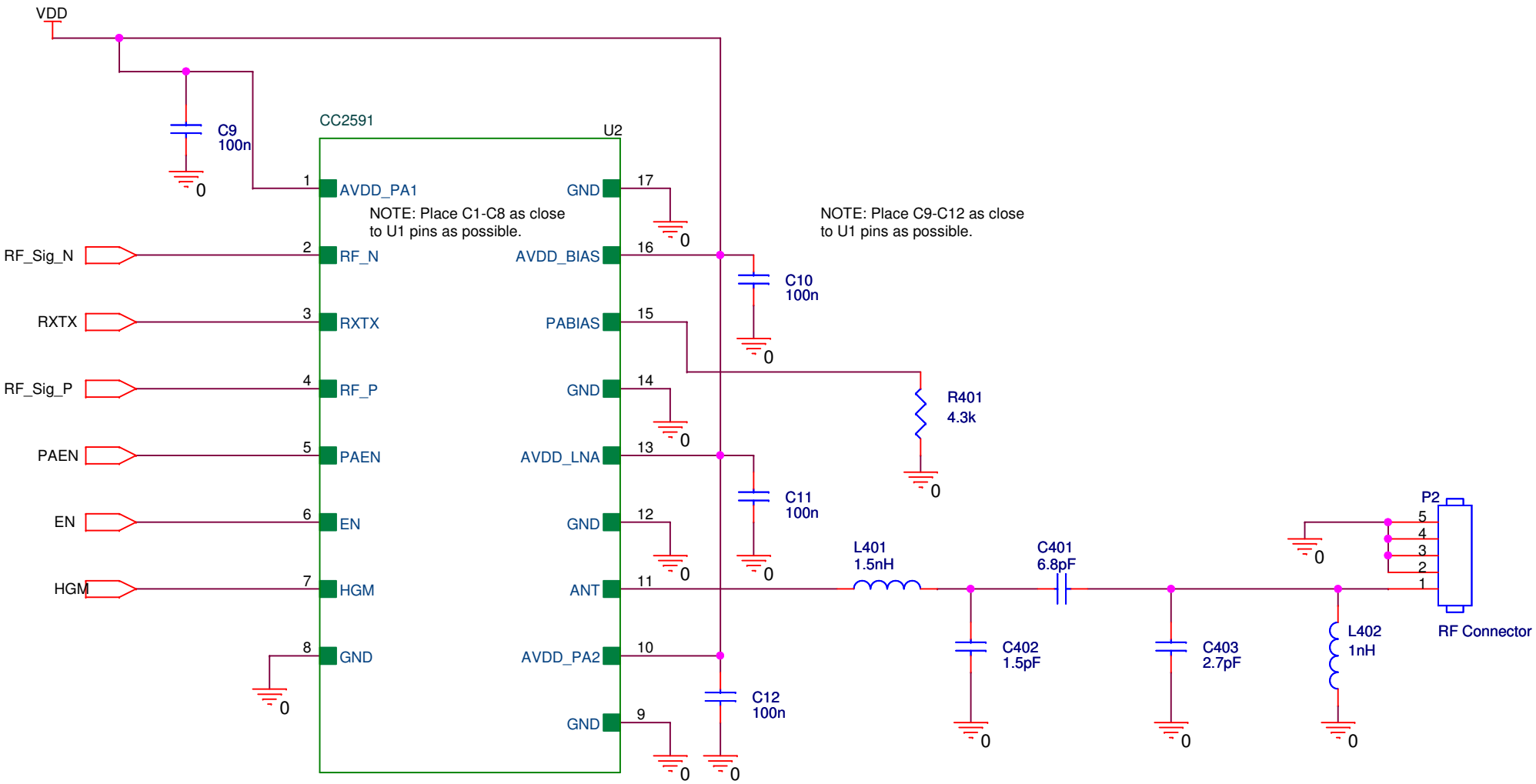

Title	Mid-Range RF Module		
Size A	Document Number P11208-001		Rev A
Date: Tuesday, October 26, 2010		Sheet 3 of 3	