REVISION		
REV	DESCRIPTION	ENGR
01	INITIAL RELEASE	Kyle Abbott

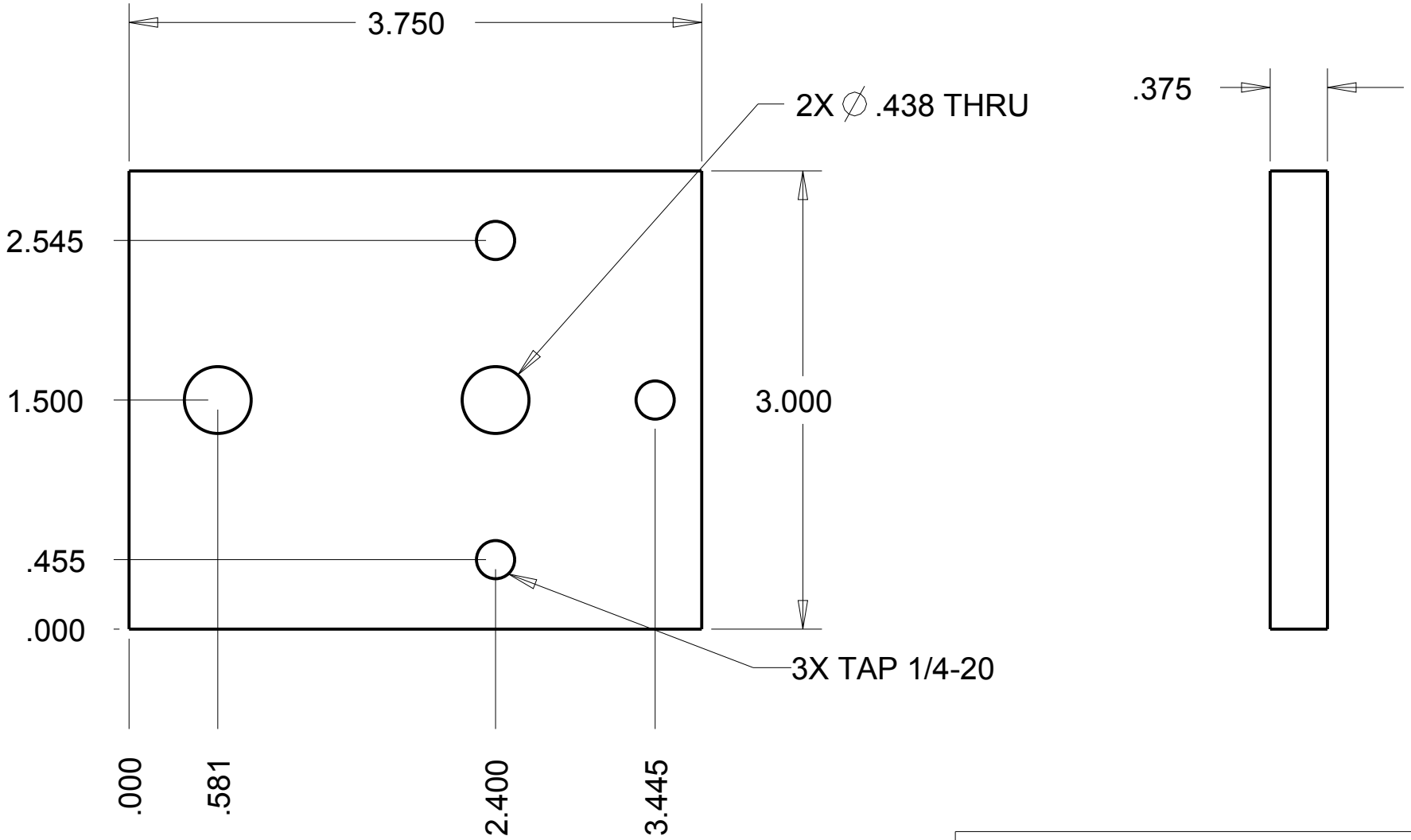

BREAK ALL SHARP EDGES	RIT MSD P14474	
	Valve Arm Blank	
UNLESS OTHERWISE NOTED ALL DIMMENSIONS ARE IN INCH; TOLERANCES ARE: X.X ± .1 X.XX ± .01 X.XXX ± .005 X.XXXx ± .0010 ANG ± .1	ENGR: Kyle Abbott	MAT'L: 6061
	SIZE: A	QTY: 1
	SCALE: 0.500	DATE: Apr-16-14
	SHEET 1 OF 1	P/N: P14474_123_B