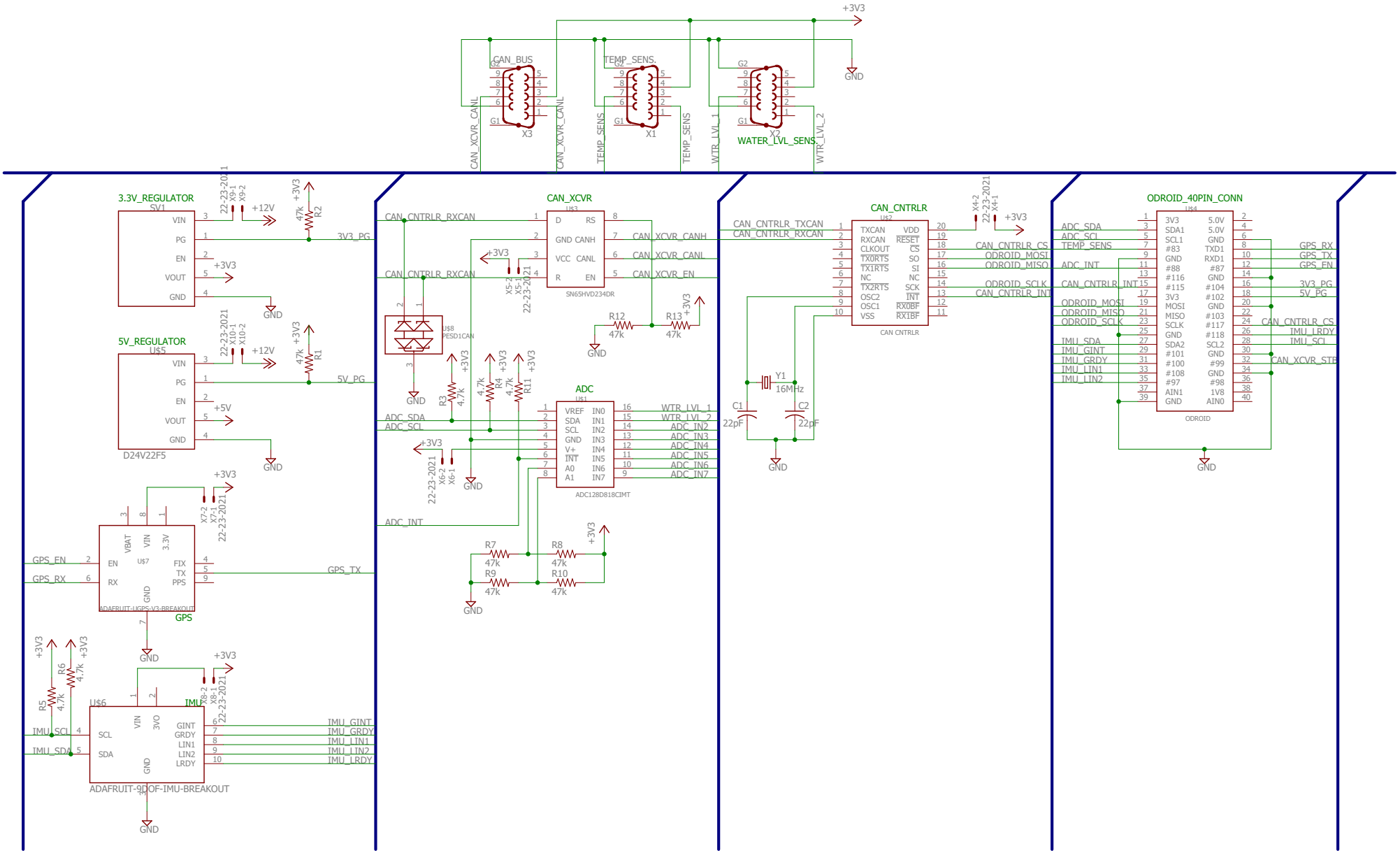

12/7/2015 8:35 PM f=0.71 C:\Users\Andy Litzinger\Documents\eagle\Sensor Board\SensorBoard_Rev1.sch (Sheet: 1/1)