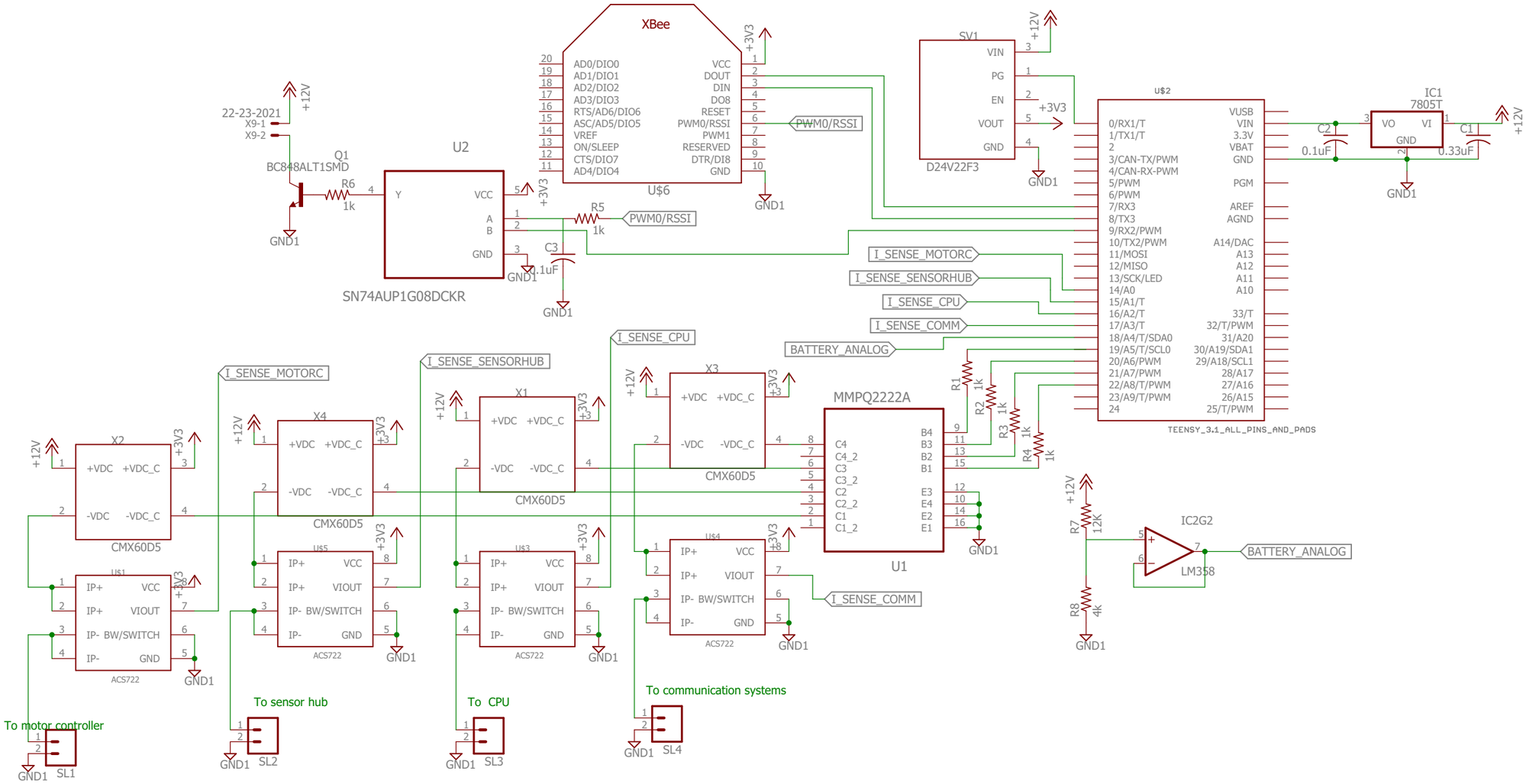
XBee
U$6
AD0/DIO0
AD1/DIO1
AD2/DIO2
AD3/DIO3
RTS/AD6/DIO6
ASC/AD5/DIO5
VREF
ON/SLEEP
CTS/DIO7
AD4/DIO4
VCC
DOUT
DIN
DO8
RESET
PWM0/RSSI
PWM1
RESERVED
DTR/DI8
GND
PWM0/RSSI
SV1
VIN
PG
EN
VOUT
GND
D24V22F3
+12V
+3V3
GND1
U$2
TEENSY_3.1_ALL_PINS_AND_PADS
VUSB
VIN
3.3V
VBAT
GND
PGM
AREF
AGND
A14/DAC
A13
A12
A11
A10
33/T
32/T/PWM
31/A20
30/A19/SDA1
29/A18/SCL1
28/A17
27/A16
26/A15
25/T/PWM
0/RX1/T
1/TX1/T
2
3/CAN-TX/PWM
4/CAN-RX-PWM
5/PWM
6/PWM
7/RX3
8/TX3
9/RX2/PWM
10/TX2/PWM
11/MOSI
12/MISO
13/SCK/LED
14/A0
15/A1/T
16/A2/T
17/A3/T
18/A4/T/SDA0
19/A5/T/SCL0
20/A6/PWM
21/A7/PWM
22/A8/T/PWM
23/A9/T/PWM
24
IC1
7805T
VO
VI
GND
C2
0.1uF
C1
0.33uF
22-23-2021
X9-1
X9-2
Q1
BC848ALT1SMD
R6
1k
U2
SN74AUP1G08DCKR
Y
VCC
A
B
GND
R5
1k
C3
0.1uF
I_SENSE_MOTORC
I_SENSE_SENSORHUB
I_SENSE_CPU
I_SENSE_COMM
BATTERY_ANALOG
R1
R2
R3
R4
1k
MMPQ2222A
U1
C4
C4_2
C3
C3_2
C2
C2_2
C1
C1_2
B4
B3
B2
B1
E3
E4
E2
E1
X2
X4
X1
X3
+VDC
+VDC_C
-VDC
-VDC_C
CMX60D5
U$1
U$5
U$3
U$4
IP+
VIOUT
IP-
BW/SWITCH
GND
VCC
ACS722
R7
12K
R8
4k
IC2G2
LM358
To motor controller
SL1
To sensor hub
SL2
To CPU
SL3
To communication systems
SL4